CIS-N (10-20 A)

Solar Charge Controller w/ Lighting Control

Technical Drawing

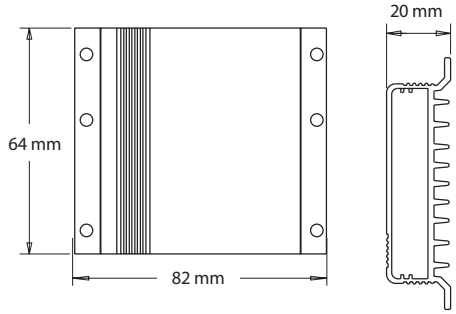

Product Introduction

The CIS-N was especially developed to deliver optimum performance in industrial PV systems in demanding environments. It features 4-stage, series-switching PWM charge regulation and is fully programmable via infrared devices (CIS-CU or MXI-IR and CISCOM software).

The CIS-N includes convenient and advanced lighting control, which allows the user to decide whether they want the automatic lighting control with LED dimming to be time or low-voltage activated.

Product Features and Functions

- Works in 12 or 24 V systems (auto recognition)
- Fully programmable charge/discharge program via infrared (CIS-CU or MXI-IR and CISCOM software)
- Timed and low-voltage dimming settings
- Dimming interface for external LED drivers
- Fully potted (IP68) aluminum housing
- UL1741/Class I Div. 2 certified
- Infrared-programmable load timing feature with dimming, ideal for lighting systems
- Modifications available upon request

Optional Accessories

CIS-CU

- Infrared remote control programming accessory

MXI-IR

- Infrared to USB programming accessory and interface to CISCOM software

The CIS-N is NRTL certified
UL listed to UL1741 and CSA C22.2 No. 107.1-16.
UL listed to ANSI/ISA 12.12.01 and CSA C22.2 No. 213-15.

E497008 Photovoltaic Charge Controller
E490503 Photovoltaic Charge Controller for use in Hazardous Locations
Class 1, Div. 2 Groups A-D

Technical Data

Type	CIS-N-10	CIS-N-20
System Voltage	12 / 24 V auto recognition	
Max. Charge/Load Current	10 A	20 A
Float Charge	13.8 / 27.6 V (25 °C)	
Main Charge	14.4 / 28.8 V (25 °C), 0.5 h daily	
Boost Charge	14.4 / 28.8 V (25 °C), 2 h activation: battery voltage < 12.3 / 24.6 V	
Equalization Charge	14.8 / 29.6 V (25 °C), 2 h activation: battery voltage < 12.1 / 24.2 V (at least every 30 days)	
Deep-Discharge Protection	11.0–12.0 / 22.0–24.0 V (by SOC) 11.0-11.9 / 22.0-23.8 V (by voltage)	
Reconnect Level	12.8 / 25.6 V	
Overvoltage Protection	15.5 / 31.0 V	
Undervoltage Protection	10.5 / 21 V	
Min. Operating Voltage	9 V / 18 V	
Range of Battery Voltage for Operation	9.0 to 15.5 V / 18.0 to 31.0 Vdc	
Load Output Voltage Range	11.0 to 15.5 / 22.0 to 31.0 Vdc	
Max. PV Panel Voltage	30 V / 50 V	
Temperature Compensation	-25 mV/K (12 V), -50 mV/K (24 V)	
Idle Self-Consumption	5–8 mA / 6–10 mA	
Grounding	Common Negative	
Ambient Temperature	–40 to +60 °C	
Max. Altitude	4,000 m above sea level	
Battery Type	Lead acid (gel, AGM, flooded) adjustable	
Wire Length	20 cm / 7.9 in	
Wire Cross Section	2.5 mm² (AWG 13)	
Dimensions (WxHxD)	82 x 64 x 20 mm / 3.2 x 3 x 1 in	
Weight	0.15 kg / 0.33 lbs	
Ingress Protection	IP68	
Certificates	CE compliant, RoHS compliant, UL1741 listed, ANSI/ISA 12.12.01 listed	
Warranty	5 years	